Government of Nepal
Ministry of Agriculture and Livestock Development
Department of Agriculture

National Centre for Fruit Development, Kirtipur

ABSRACT OF COST

076-77

Construction of Screen House for Sapling Production (Rate for Kathmandu District)

S.No.	Detail of Work	Unit	Quantity	Rate	Amount
1	E/W Excavation in foundation in ordinary soil and other work lift 1.5m. and lead up to 10m all complete.	cu.m	15.873	540.75	8583.32
2	Providing and laying flat brick soling with sand all complete.	sq.m	36.867	957.79	35310.84
3	Providing and laying P.C.C. 1:2:4 including curing all complete.	cu.m	5.193	14253.18	74016.76
4	Providing and laying brick masonry in 1:4 in walls, foundation including curing all complete.	cu.m	10.772	14289.33	153924.66
5	Providing and laying R.C.C. 1:2:4 in super structure, slab, beam etc. including curing all complete.	cu.m	2.063	17687.48	36489.27
6	Providing and laying tor steel reinforcement for all kinds of R.C.C. work including cutting, bending, binding all complete.	kg.	342.995	122.06	41865.97
7	Providing and fixing Wooden formwork for for all kinds of R.C.C. works and its removal all complete.	sq.m	45.840	781.02	35801.96
8	Providing and laying 12.5mm thick cement plaster (1:4) including curing all complete.	sq.m	82.534	390.49	32228.70
9	Providing and laying 3mm thick cement punning including curing all complete.	sq.m	82.534	275.75	22758.75
10	Fabrication and erection of black pipe square & rectangular truss, purlin, runner & MS plates for joining purpose as per design including metallic primer paint etc all complete work.	kg	2648.840	165.62	438700.88
11	Providing, laying, stretching and fixing U. V. stabilized Polyethylene film 200 micron thickness, IR blocking, Anti drip/ fog, diffused (Multilayor) for covering etc. all complete.	sq.m	270.265	198.38	53615.17
12	Providing and fixing Aluminium casement for outer net frame of section (38 x34 x1.1 mm) including drilling, screwing, silicon fixing, etc. all complete.	r.m	202.60	390.56	79127.46
13	Providing and fixing Aluminium casement for intermediate net frame of section (54x38 x1.1 mm) including drilling, screwing, silicon fixing, etc. all complete.	r.m	117.30	491.77	57684.62
14	Providing and fixing Aluminium profile with PVC coated zig zag spring for Polyethylene film fixing work with screw all complete.	r.m	322.20	197.00	63473.40
15	Providing and fitting Aluminium door of section (102 x45 x1.5 mm) and sliding shutter with 5mm thick glass including handle, hings, lock, rubber seal, silicon, etc. all complete.	sq.m	9.00	7069.32	63623.88

Agril. Engineer

Estimated by

Approved by

नि. प्रमुख

Government of Nepal
Ministry of Agriculture and Livestock Development
Department of Agriculture

National Centre for Fruit Development, Kirtipur

ABSRACT OF COST

076-77

Construction of Screen House for Sapling Production (Rate for Kathmandu District)

S.No.	Detail of Work	Unit	Quantity	Rate	Amount
16	Providing and fitting Aluminium casement windows of section (64 x38 x1.1) with 5 mm thick fixed glass including rubber seal, silicon, aluminium strips, etc. all complete.	sq.m	6.00	5143.28	30859.68
17	Providing and fixing aphid proof 40 mesh PVC net including fitting, stretching etc. all complete work.	sq.m	146.28	296.08	43310.58
18	Providing and fixing irrigation system including 1000 liters PVC water tank, pipes, sprinlkers fitting all complete.	set	1.00	50000.00	50000.00
19	Providing and fixing electrification work including wiring, 18" dia. exhaust fans, power sockets, lighting arrangement all complete.	set	1.00	25000.00	25000.00
20	Providing and painting enamel paint on mild steel members	job	1.00	20000.00	20000.00
21	Levelling the ground, floor & foundation compaction manually.	set	1.00	15000.00	15000.00
22	Site clearence before and after completion of work all complete.		L.S.		5000.00
	Total Amount (without overhead & contingency)			Rs.	1386375.92

Agril. Engineer

Estimated by

Approved by

नि. प्रमुख

Government of Nepal
Ministry of Agriculture and Livestock Development
Department of Agriculture

National Center for Fruit Development, Kirtipur

DETAIL ESTIMATE

Construction of Screen House for Sapling Production

S.No.	Detail of works	No.	Length	Breadth	Height	Quantity	Unit
1	Earth work excavation	31	0.60	0.60	0.60	6.696	
		1	56.40	0.47	0.40	10.603	
		1	3.28	0.35	0.40	0.459	
		1	2.65	0.45	0.50	0.596	
						18.355	cu.m
	deduction	22	0.60	0.47	0.40	2.482	cu.m
						15.873	**cu.m**
2	Flat brick soling with sand	31	0.60	0.60		11.160	
		1	56.40	0.47		26.508	
		1	3.28	0.47		1.542	
		1	1.50	1.54		2.310	
						41.520	sq.m
	deduction	22	0.47	0.45		4.653	sq.m
						36.867	**sq.m**
3	P.C.C. 1:2:4	31	0.60	0.60	0.05	0.558	
		31	0.45	0.45	0.50	3.139	
		1	56.40	0.47	0.05	1.325	
		1	3.28	0.47	0.05	0.077	
	ramp	2	1.50	0.45	0.075	0.101	
		1	2.00	1.50	0.075	0.225	
						5.425	cu.m
	deduction	22	0.47	0.45	0.05	0.233	cu.m
						5.193	**cu.m**
4	Brick work in cement mortar 1:4	1	56.40	0.35	0.30	5.922	
		1	56.40	0.23	0.40	5.189	
		1	3.28	0.35	0.06	0.069	
		1	3.28	0.35	0.30	0.344	
	ramp	3	1.5	0.23	0.50	0.518	
						12.042	cu.m
	deduction	22	0.45	0.35	0.30	1.040	
		2	2.00	0.23	0.25	0.230	
						1.270	cu.m
						10.772	**cu.m**
5	P.C.C. 1:1.5:3 for R.C.C.	1	56.40	0.23	0.15	1.946	
		1	3.40	0.23	0.15	0.117	
						2.063	**cu.m**
6	Steel reinforcement						
	12mm dia. Bars	8	19.50			156.000	
		8	0.90			7.200	
		8	9.50			76.000	
		4	2.50			10.000	
		4	2.05			8.200	

Agril. Engineer

Estimated by

Approved by

Government of Nepal
Ministry of Agriculture and Livestock Development
Department of Agriculture

National Center for Fruit Development, Kirtipur

DETAIL ESTIMATE

Construction of Screen House for Sapling Production

S.No.	Detail of works	No.	Length	Breadth	Height	Quantity	Unit
						257.400	rm
					.888kg/m	228.571	kg
	8mm dia. Bars	377	0.71			267.670	
		31	0.71			22.010	
						289.680	rm
					.395kg/m	114.424	kg
						342.995	**kg**
7	Form work	31	1.80		0.50	27.900	
		2	56.40		0.15	16.920	
		2	3.40		0.15	1.020	
						45.840	**sq.m**
8	12.5mm thick cement plaster 1:4	1	56.40		1.33	75.012	
		1	3.40		1.33	4.522	
		1	2.00	1.5		3.000	
						82.534	**sq.m**
9	3mm thick cement punning work	1	56.40		1.33	75.012	
		1	3.40		1.33	4.522	
		1	2.00	1.50		3.000	
						82.534	**sq.m**
10	M.S. black pipe post & truss fitting.						
	50*50mm size M.S. square pipe (Heavy)	31	3.05	94.55			
		2	2.50	5.00			
		4	3.18	12.72			
		4	19.25	77.00			
		2	9.05	18.10			
		1	3.50	3.50			
	tie beam	9	10.62	95.58			
				306.45	4.45kg/m	1363.703	kg
	38.1*38.1 mm Rafter	9	11.27	101.43	2.62 kg/m	265.747	kg
	25.4*38.1 mm Strut dia	9	15.02	135.180			
				135.180	1.73 kg/m	233.861	kg
	M.S. plate for truss & support	32	0.16	0.38	0.004	0.008	cu.m
						60.288	kg
	M.S. black pipe purlin & runner						
	25.4*25.4mm purlin	12	18.75	225.000	1.05 kg/m	236.250	kg
	38.1*25.4 mm purlin	13	18.858	245.15			
	runner	2	18.75	37.50			
				282.65	1.73 kg/m	488.991	kg
						2648.840	**kg**

Agril. Engineer

Estimated by

Approved by

Government of Nepal
Ministry of Agriculture and Livestock Development
Department of Agriculture

National Center for Fruit Development, Kirtipur

DETAIL ESTIMATE

Construction of Screen House for Sapling Production

S.No.	Detail of works	No.	Length	Breadth	Height	Quantity	Unit
11	U. V. stabilized Polyethylene film 200 micron thickness, IR blocking, Anti drip/ fog, diffused (Multilayor) for covering	1	13.05	19.30		251.865	
		2	9.20	1.00		18.400	
						270.265	sq.m
12	Aluminium outer frame	4	18.80			75.20	
		4	8.85			35.40	
	v	34	2.00			68.00	
		12	2.00			24.00	
						202.60	r.m
13	Aluminium internal member	2	18.80			37.60	
		2	8.85			17.70	
	v	31	2.00			62.00	
						117.30	r.m
14	Aluminium profile with PVC coated zig zak spring	8	19.25			154.00	
		2	10.60			21.20	
		4	9.05			36.20	
		3	13.00			39.00	
		12	1.65			19.80	
		26	2.00			52.00	
						322.20	r.m
15	Aluminium door with shutter 101*45*1.1	2	2.00		2.25	9.00	sq.m
16	5mm thick fixed glass with aluminium frame 54*38*1.5mm	1	1.50		2.00	3.00	
		1	2.00	1.50		3.00	
						6.00	sq.m
17	Aphid proof PVC net fixing	2	19.15		2.00	76.60	
		1	9.00		2.00	18.00	
		1	7.00		2.00	14.00	
		2	10.60		1.65	34.98	
		2	3.00	0.45		2.70	
						146.28	sq.m
18	Irrigation management including 1000 Liters PVC water tank, pipes, sprinlkers fitting all complete.	1				**1.00**	set
19	Electrification work including wiring, exhaust fans, power sockets, lighting arrangement all complete.	1				**1.00**	set
20	Enamel painting on mild steel members	1				**1.00**	job
21	Levelling the ground, floor & foundation compaction manually.	1				**1.00**	job
22	Site clearance work.	1				**L.S.**	

Estimated by

Agril. Engineer

Approved by

नि. प्रमुख

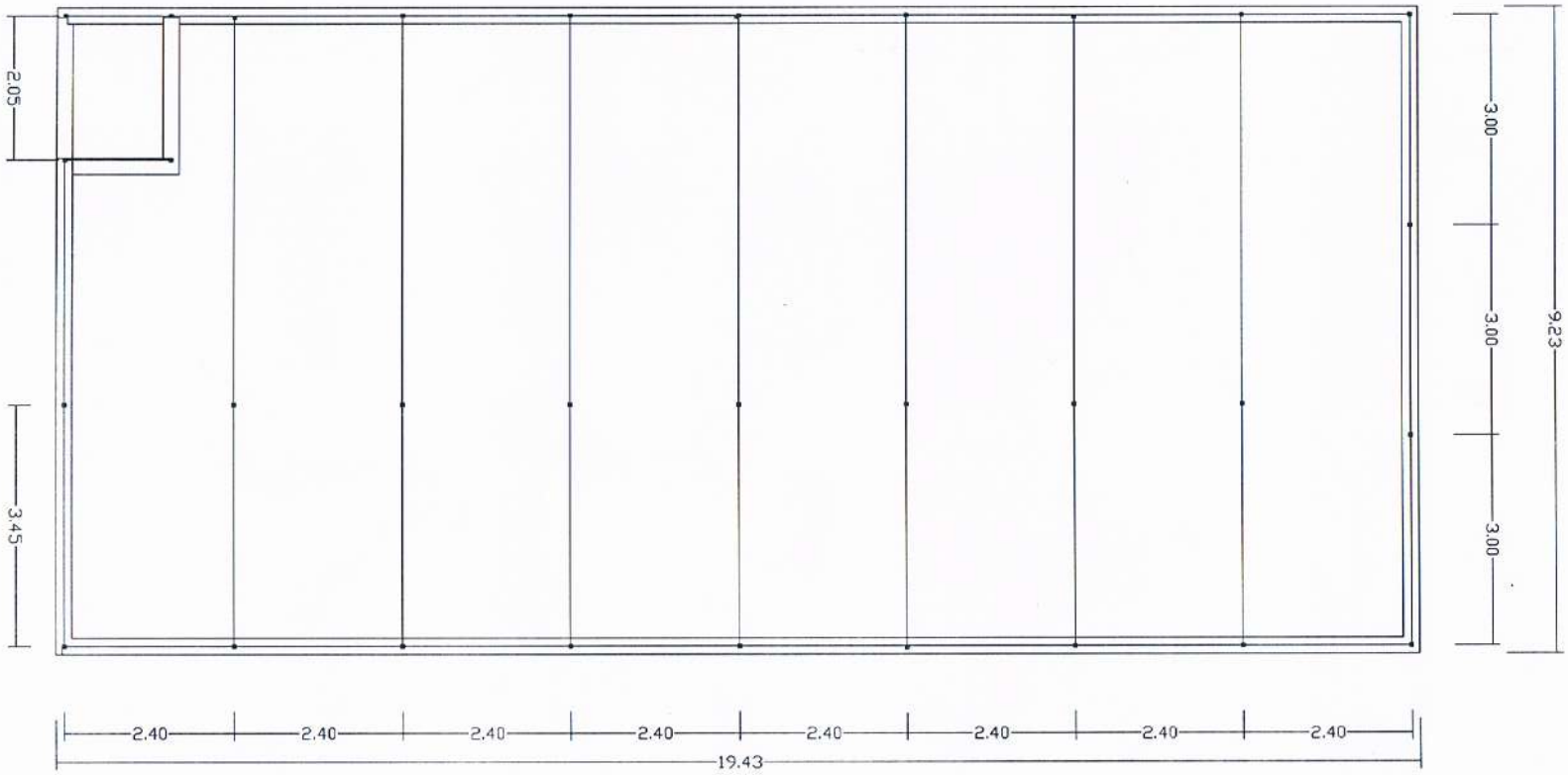

Screen House Plinth Plan

नि. प्रमुख

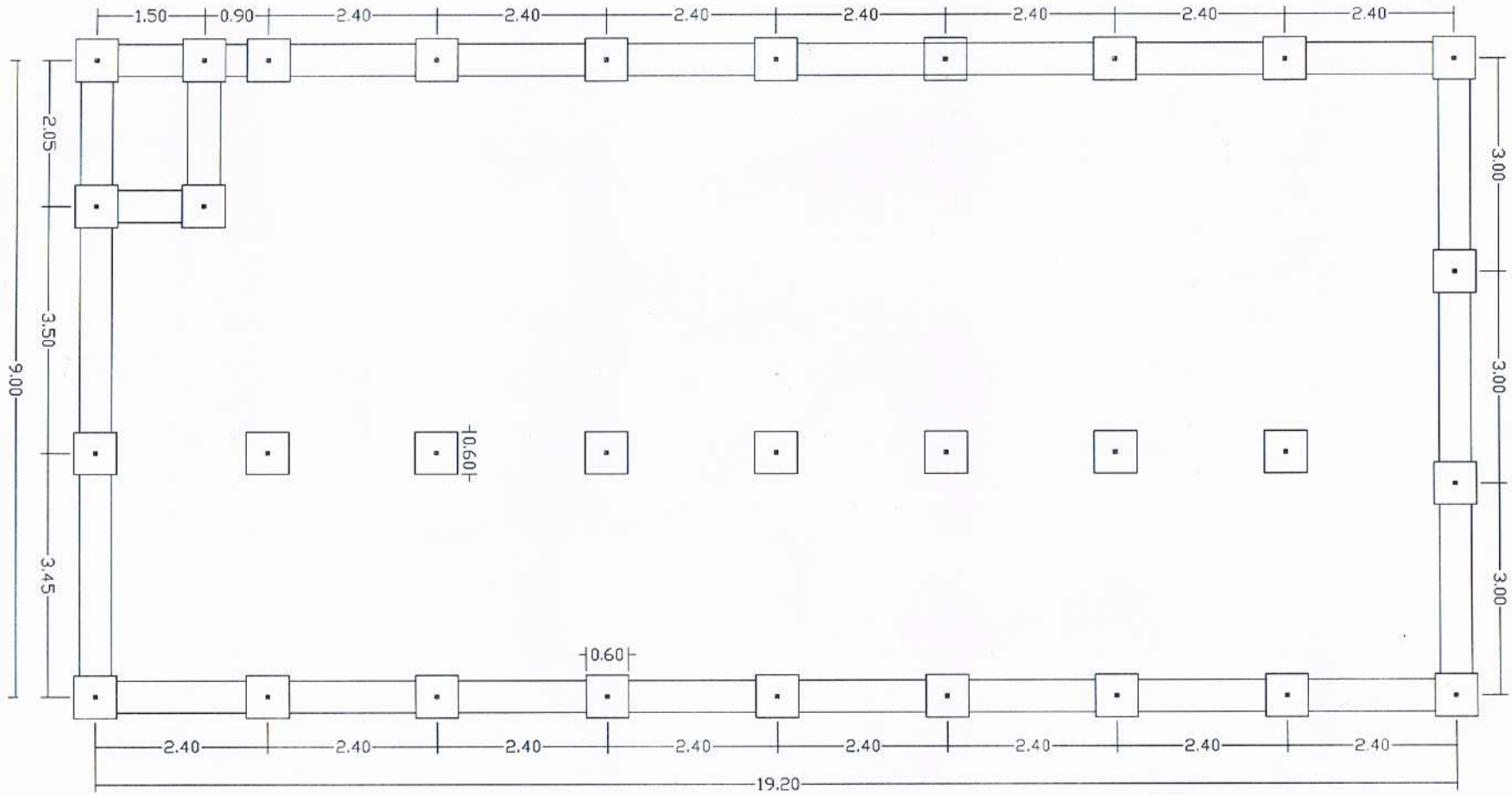

Foundation Trench Plan

नेपाल सरकार
कृषि तथा पशुपंछी विकास मन्त्रालय
कृषि विभाग
राष्ट्रिय फलफूल विकास बोर्ड
कीर्तिपुर, काठमाडौं

कि. प्रमुख

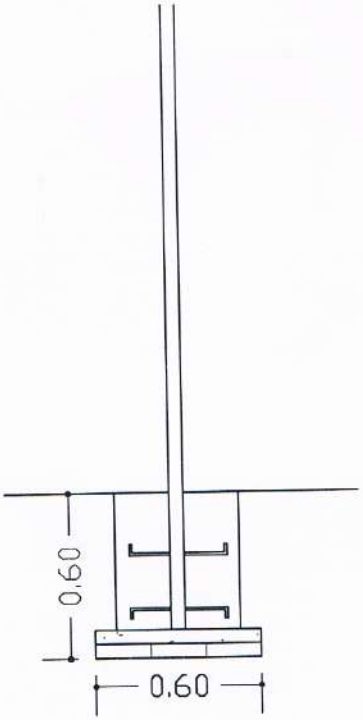

POLE FOUNDATION

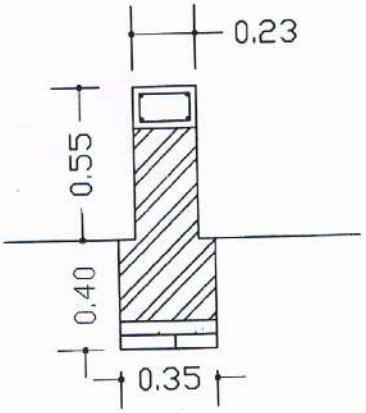

WALL FOUNDATION

नि. प्रमुख

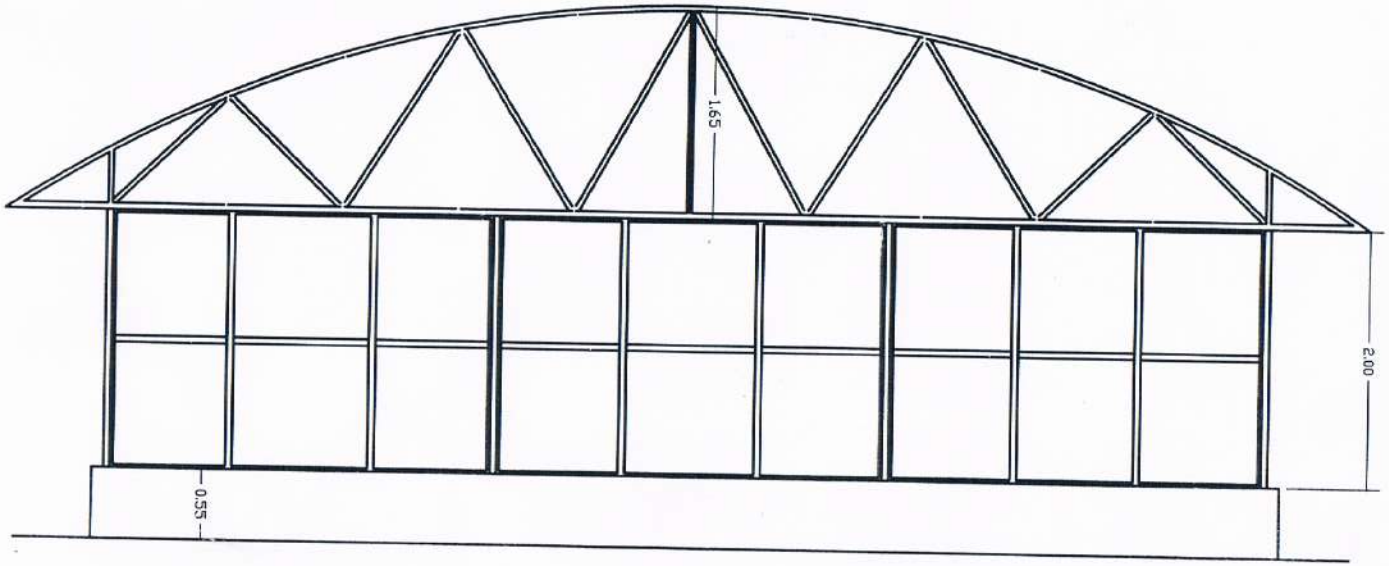

SIDE ELEVATION

Government of Nepal
Ministry of Agriculture and Livestock Development
Singhadurbar, Kathmandu

नेपाल सरकार
कृषि तथा पशुपन्छी विकास मन्त्रालय
कृषि विभाग
राष्ट्रिय फलफूल विकास केन्द्र
कीर्तिपुर, काठमाडौं

नि. प्रमुख

Government of Nepal
Ministry of Agriculture and Livestock Development
Department of Agriculture

National Centre for Fruit Development, Kirtipur

Bill of Quantities

Construction of Screen House for Sapling Production at ..... District

S.No.	Detail of Works	Unit	Quantity	Rate		Amount	Remarks
				In Figure	In Words		
1	E/W Excavation in foundation in ordinary soil and other work lift 1.5m. and lead up to 10m all complete.	cu.m	15.873				
2	Providing and laying flat brick soling with sand all complete.	sq.m	36.867				
3	Providing and laying P.C.C. 1:2:4 including curing all complete.	cu.m	5.193				
4	Providing and laying brick masonry in 1:4 in walls, foundation including curing all complete.	cu.m	10.772				
5	Providing and laying R.C.C. 1:2:4 in super structure, slab, beam etc. including curing all complete.	cu.m	2.063				
6	Providing and laying tor steel reinforcement for all kinds of R.C.C. work including cutting, bending, binding all complete.	kg.	342.995				
7	Providing and fixing Wooden formwork for for all kinds of R.C.C. works and its removal all complete.	sq.m	45.840				
8	Providing and laying 12.5mm thick cement plaster (1:4) including curing all complete.	sq.m	82.534				
9	Providing and laying 3mm thick cement punning including curing all complete.	sq.m	82.534				

Government of Nepal
Ministry of Agriculture and Livestock Development
Department of Agriculture

National Centre for Fruit Development, Kirtipur

Bill of Quantities

Construction of Screen House for Sapling Production at ..... District

S.No.	Detail of Works	Unit	Quantity	Rate		Amount	Remarks
				In Figure	In Words		
10	Fabrication and erection of black pipe square & rectangular truss, purlin, runner & MS plates for joining purpose as per design including metallic primer paint etc all complete work.	kg	2648.840				
11	Providing, laying, stretching and fixing U. V. stabilized Polyethylene film 200 micron thickness, IR blocking, Anti drip/ fog, diffused (Multilayor) for covering etc. all complete.	sq.m	270.265				
12	Providing and fixing Aluminium casement for outer net frame of section (38 x34 x1.1 mm) including drilling, screwing, silicon fixing, etc. all complete.	r.m	202.60				
13	Providing and fixing Aluminium casement for intermediate net frame of section (54x38 x1.1 mm) including drilling, screwing, silicon fixing, etc. all complete.	r.m	117.30				
14	Providing and fixing Aluminium profile with PVC coated zig zag spring for Polyethylene film fixing work with screw all complete.	r.m	322.20				
15	Providing and fitting Aluminium door of section (102 x45 x1.5 mm) and sliding shutter with 5mm thick glass including handle, hings, lock, rubber seal, silicon, etc. all complete.	sq.m	9.00				

Government of Nepal
Ministry of Agriculture and Livestock Development
Department of Agriculture

National Centre for Fruit Development, Kirtipur

Bill of Quantities

Construction of Screen House for Sapling Production at ..... District

S.No.	Detail of Works	Unit	Quantity	Rate		Amount	Remarks
				In Figure	In Words		
16	Providing and fitting Aluminium casement windows of section (64 x38 x1.1) with 5 mm thick fixed glass including rubber seal, silicon, aluminium strips, etc. all complete.	sq.m	6.00				
17	Providing and fixing aphid proof 40 mesh PVC net including fitting, stretching etc. all complete work.	sq.m	146.28				
18	Providing and fixing irrigation system including 1000 liters PVC water tank, pipes, sprinlkers fitting all complete.	set	1.00				
19	Providing and fixing electrification work including wiring, 18" dia. exhaust fans, power sockets, lighting arrangement all complete.	set	1.00				
20	Providing and painting enamel paint on mild steel members	job	1.00				
21	Levelling the ground, floor & foundation compaction manually.	set	1.00				
22	Site clearence before and after completion of work all complete.		L.S.				
	Total Amount				Rs.		